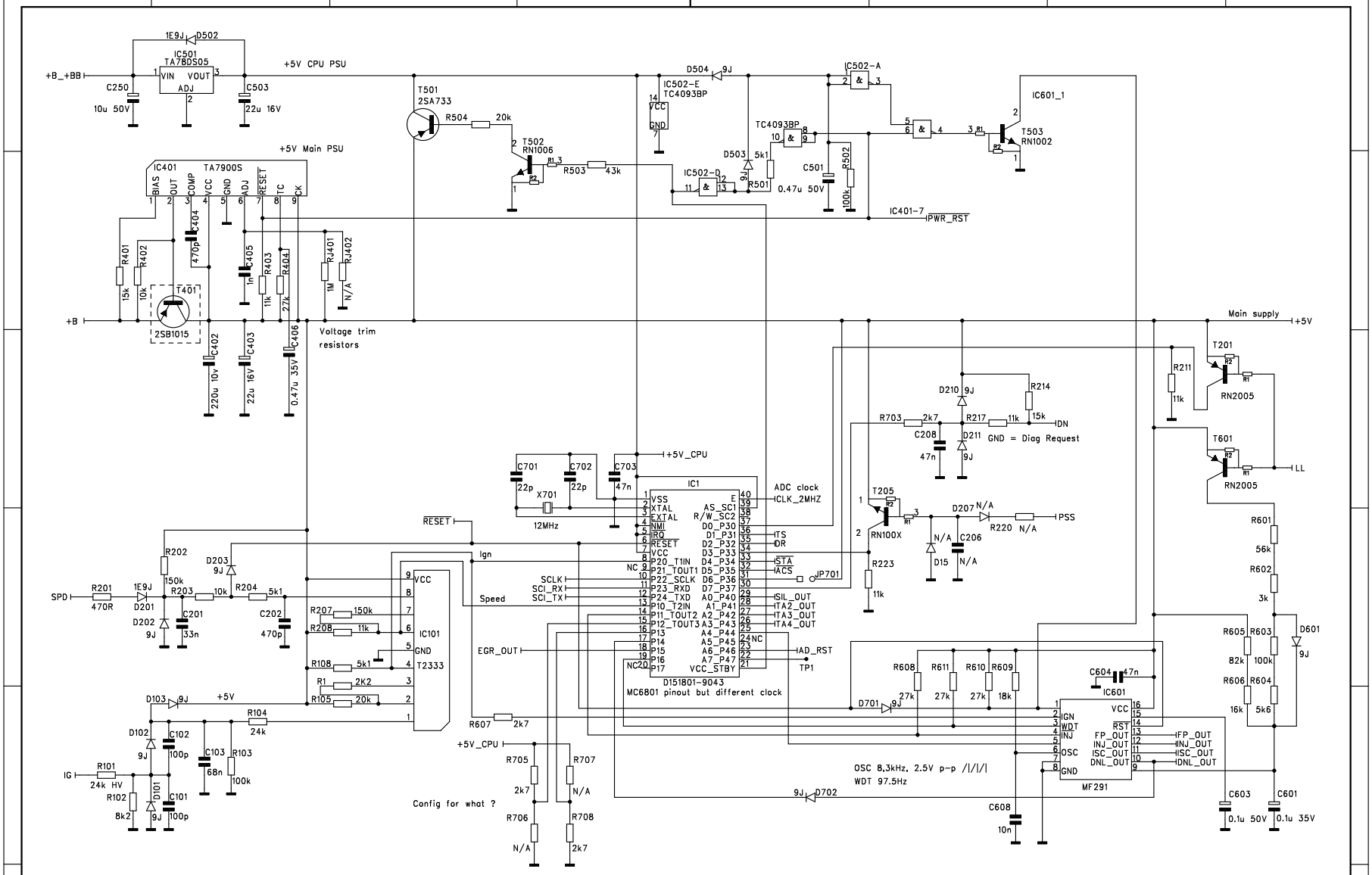

Denso D3 ECU	Cover 4-MT-FED 33920-63B7 3 112000-0493	PCB 112031-0120	Reverse Engineered	Drawn	03.12.2008	JNi
			DRAWING No. Rev. 10.12.2008	Appr.		Page 2/2